DAEX25W-8

Waterproof 25mm Exciter 10W 8 Ohm

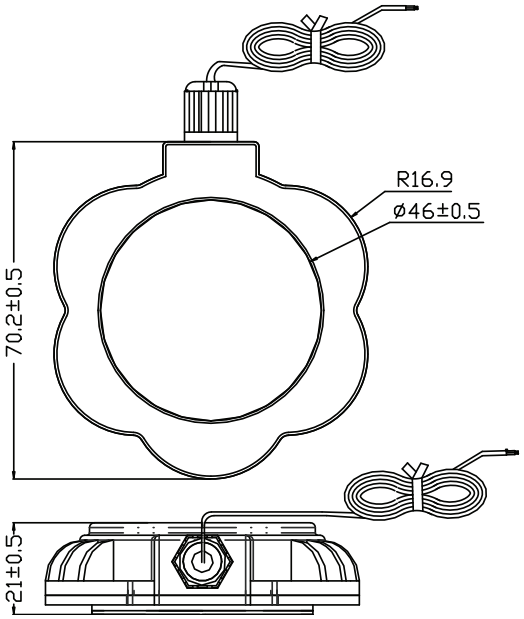

Features

- IP67 rated watertight enclosure
- Integrated all-weather connector/cable
- Dust-tight, water resistant enclosure
- 3M adhesive disc for secure placement

Applications

- Shower and bath
- Marine audio
- All-weather audio
- Outdoor applications

Impedance Plot

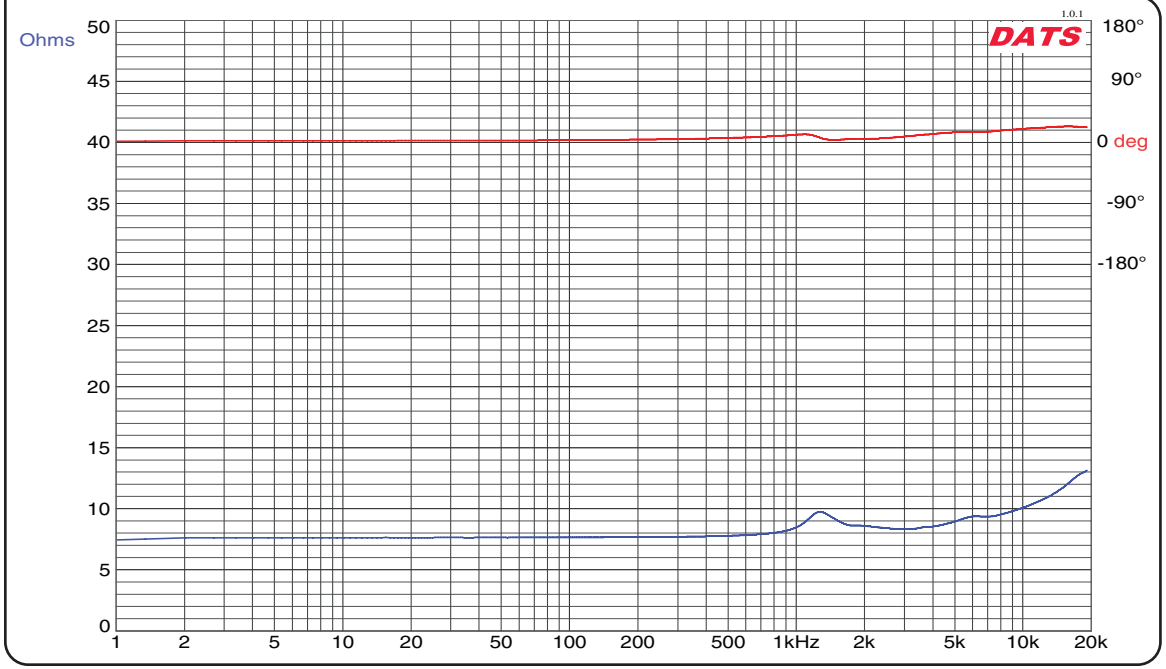

Parameters

Impedance (Ω)	8
Re (Ω)	7.6
Le (mH) @ 1 kHz	0.58
Fs (Hz) - Uncoupled	1276
Qms	—
Qes	—
Qts	1.25
Mms (g)	0.26
Cms (mm/N)	0.0002
Sd (cm^2)	—
Vd (cm^3)	—
BL (Tm)	1.12
V_{AS} (liters)	—
X_{MAX} (mm)	—
VC Diameter (mm)	25
Net Weight (g)	83.9
RMS Power Handling (W)	10
Usable Frequency Range (Hz)	*

 © Dayton Audio Last Revised: 2/5/2014

Note: All dimensions in mm.

**** Frequency response varies by application.***